SECTION FAX

FRONT AXLE

CONTENTS

PRECAUTIONS 2
Caution 2
PREPARATION 3
Special Service Tools [SST] 3
Commercial Service Tools 5
NOISE, VIBRATION AND HARSHNESS (NVH) TROUBLESHOOTING 6
NVH Troubleshooting Chart 6
FRONT WHEEL HUB AND KNUCKLE 7
On-Vehicle Inspection and Service 7
WHEEL BEARING INSPECTION 7
Removal and Installation 7
COMPONENT 7
REMOVAL 7
INSPECTION AFTER REMOVAL 9
INSTALLATION 9
Disassembly and Assembly 10
DISASSEMBLY 10
INSPECTION AFTER DISASSEMBLY 10
ASSEMBLY 11
INSPECTION AFTER ASSEMBLY 12
FRONT DRIVE SHAFT 13
On-Vehicle Inspection and Service 13
DRIVE SHAFT BOOT REPLACEMENT 13
Removal and Installation (RH) 16
COMPONENT 16
REMOVAL 16
INSPECTION AFTER REMOVAL 17
INSTALLATION 17
Removal and Installation (LH) 18
COMPONENT 18
REMOVAL 18
INSPECTION AFTER REMOVAL 19
INSTALLATION 19
Disassembly and Assembly (Models with 2WD: RH)... 20
COMPONENT 20
DISASSEMBLY 20
INSPECTION AFTER DISASSEMBLY 22
ASSEMBLY 22
Disassembly and Assembly (Models with AWD: RH) ... 25
COMPONENT 25
DISASSEMBLY 25
INSPECTION AFTER DISASSEMBLY 26
ASSEMBLY 26
Disassembly and Assembly (LH) 28
COMPONENT 28
DISASSEMBLY 28
INSPECTION AFTER DISASSEMBLY 29
ASSEMBLY 29
SERVICE DATA AND SPECIFICATIONS (SDS) 31
Wheel Bearing 31
Drive Shaft 31
Dynamic Damper 31

PRECAUTIONS

PFP:00001

Caution

ADS0014Y

Observe the following precautions when disassembling and assembling drive shaft.

- Perform work in a location which is as dust-free as possible.
- Before disassembling and assembling, clean the outside of parts.
- Prevention of entry of foreign objects must be taken into account during disassembly of the service location.
- Disassembled parts must be carefully reassembled in the correct order. If work is interrupted, a clean cover must be placed over parts.
- Paper shop cloths must be used. Fabric shop cloths must not be used because of danger of lint adhering to parts.
- Disassembled parts (except for rubber parts) should be cleaned with kerosene which shall be removed by blowing with air or wiping with paper shop cloths.

PREPARATION

PFP:00002

Special Service Tools [SST]

ADS0014Z

Tool number (Kent-Moore No.) Tool name		Description
HT72520000 (J-25730-A) Ball joint remover a: 33 mm (1.30 in) b: 50 mm (1.97 in) r: 11.5 mm (0.453 in)	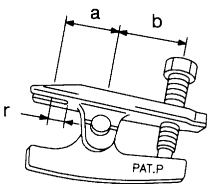 NT546	Removing steering outer socket and transverse link
ST36230000 (J-25840-A) Sliding hammer	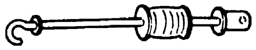 ZZA0803D	Removing wheel hub
KV40104100 (—) Attachment	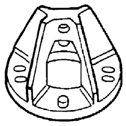 ZZA0804D	Removing wheel hub
ST33061000 (J-8107-2) Drift a: 28.5 mm (1.122 in) dia. b: 38.0 mm (1.50 in) dia.	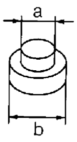 ZZA0969D	Removing wheel bearing outer side inner race
KV38100200 (—) Drift a: 65 mm (2.65 in) dia. b: 49 mm (1.93 in) dia.	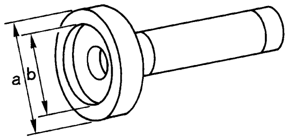 ZZA1143D	Removing wheel bearing
KV40106200 (—) Drift a: 114.3 mm (4.50 in) dia. b: 105.3 mm (4.15 in) dia.	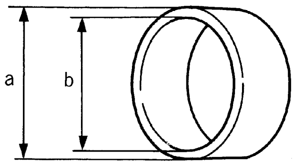 ZZA0936D	Removing wheel bearing and installing splash guard
ST35271000 (J-26091) Drift a: 72 mm (2.83 in) dia. b: 63 mm (2.48 in) dia.	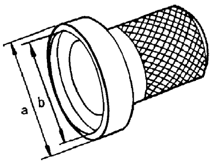 ZZA0814D	Installing wheel bearing and support bearing

Tool number (Kent-Moore No.) Tool name	Description
KV40104710 (—) Drift a: 76.3 mm (3.004 in) dia. b: 67.9 mm (2.673 in) dia. 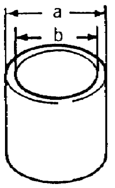 ZZA0832D	Installing wheel bearing and splash guard
KV40105220 (—) Drift a: 75 mm (2.95 in) dia. b: 62 mm (2.44 in) dia. 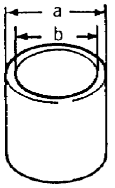 ZZA0832D	Installing splash guard
ST30022000 (—) Drift a: 110 mm (4.33 in) dia. b: 46 mm (1.81 in) dia. 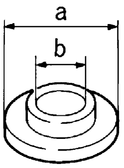 ZZA0920D	Installing splash guard
ST35300000 (—) Drift a: 45.1 mm (1.776 in) dia. b: 59 mm (2.32 in) dia. 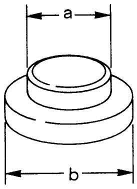 ZZA0881D	Installing wheel hub
KV40105310 (—) Drift a: 89.1 mm (3.508 in) dia. b: 80.7 mm (3.177 in) dia. 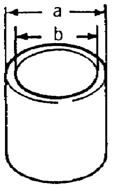 ZZA0832D	Installing wheel hub
KV40107300 (—) Boot band crimping tool 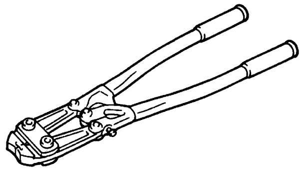 ZZA1229D	Installing boot band
KV38105500 (J-33904) Protector a: 32 mm (1.26 in) dia 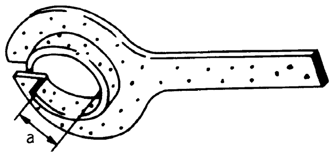 ZZA0835D	Installing drive shaft

Tool number (Kent-Moore No.) Tool name	Description
KV40107500 (—) Drive shaft attachment 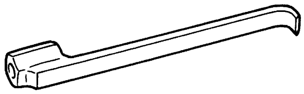 ZZA1230D	Removing drive shaft
ST17130000 (—) Drift a: 32 mm (1.26 in) dia. b: 60 mm (1.57 in) dia. 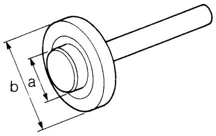 ZZA0836D	Removing support bearing
KV38100500 (—) Drift a: 80 mm (3.15 in) dia. b: 60 mm (2.36 in) dia. 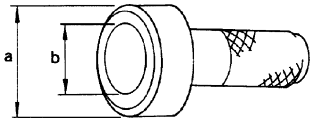 ZZA0701D	Installing sensor rotor
KV40101840 (—) Drift a: 67 mm (2.64 in) dia. b: 85 mm (3.35 in) dia. 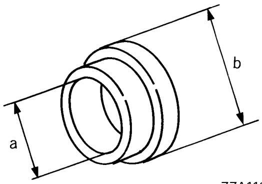 ZZA1113D	Installing sensor rotor
ST33252000 (—) Drift a: 82 mm (3.23 in) dia. b: 60 mm (2.36 in) dia. 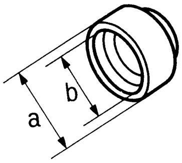 ZZA0838D	Installing support bearing

Commercial Service Tools

ADS0016W

Tool name	Description
Power tool 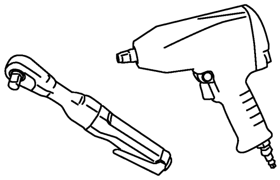 PBIC0190E	● Removing wheel nuts ● Removing torque member fixing bolts ● Removing hub lock nut

NOISE, VIBRATION AND HARSHNESS (NVH) TROUBLESHOOTING

PFP:00003

NVH Troubleshooting Chart

ADS00150

Use chart below to help you find the cause of the symptom. If necessary, repair or replace these parts.

Reference page			—	FAX-22, FAX-26, FAX-29	—	FAX-7	—	NVH in PR section	NVH in RFD section	NVH in FAX and FSU sections	Refer to Front axle in this chart	NVH in WT section	NVH in WT section	Refer to DRIVE SHAFT in this chart	NVH in BR section	NVH in PS section
Possible cause and Suspected parts			Excessive joint angle	Joint sliding resistance	Imbalance	Improper installation, looseness	Parts interference	PROPELLER SHAFT	DIFFERENTIAL	FRONT AXLE AND FRONT SUSPENSION	FNONT AXLE	TIRES	ROAD WHEELS	DRIVE SHAFT	BRAKES	STEERING
Symptom	Drive Shaft	Noise	×	×				×	×	×	×	×	×		×	×
		Shake	×		×			×		×	×	×	×		×	×
	Front Axle	Noise				×	×	×	×	×		×	×	×	×	×
		Shake				×	×	×		×		×	×	×	×	×
		Vibration				×	×	×		×		×		×		×
		Shimmy				×	×			×		×	×		×	×
		Judder				×				×		×	×		×	×
		Poor quality ride or handling				×	×			×		×	×			

×: Applicable

FRONT WHEEL HUB AND KNUCKLE

PFP:40202

A
B
C
FAX
E
F
G
H
I
J
K
L
M

On-Vehicle Inspection and Service

ADS00151

Make sure that the mounting conditions (looseness, backlash) of each of the component and component conditions (wear, damage) are normal.

WHEEL BEARING INSPECTION

- Move wheel hub in the axial direction by hand. Make sure there is no looseness of wheel bearing.

  Axial end play : 0.05 mm (0.002 in) or less

- Rotate wheel hub and make sure that is no unusual noise or other irregular conditions. If there is any of irregular conditions, replace wheel bearing.

Removal and Installation

ADS00152

COMPONENT

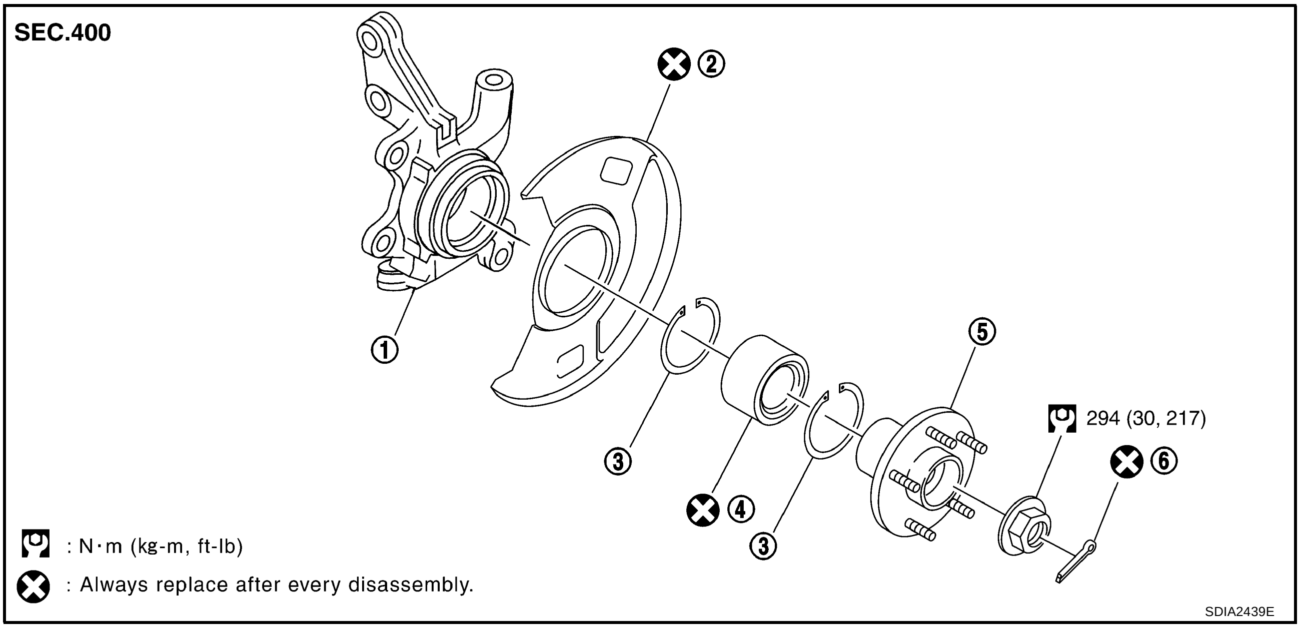

1.	Steering knuckle	2.	Splash guard	3.	Snap ring
4.	Wheel bearing	5.	Wheel hub	6.	Cotter pin

REMOVAL

1. Remove tires from vehicle with a power tool.
2. Remove wheel sensor from steering knuckle. Refer to BRC-36, "WHEEL SENSORS" .

   CAUTION:
   Do not pull on wheel sensor harness.
3. Remove torque member fixing bolts with a power tool. Hang torque member in a place where it will not interfere with work. Refer to BR-25, "FRONT DISC BRAKE" .

   NOTE:
   Avoid depressing brake pedal while brake caliper is removed.
4. Put matching mark on disc rotor and wheel hub, then remove disc rotor.
5. Remove cotter pin, then loosen hub lock nut with power tool.

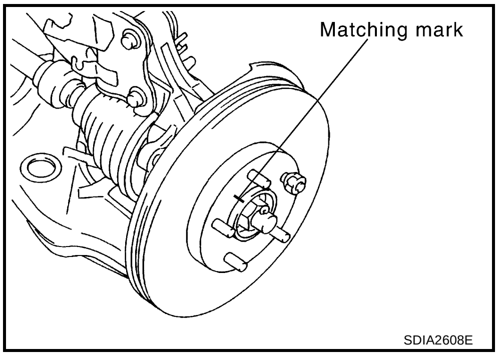

6. Separate wheel hub from drive shaft by lightly tapping the end with a hammer (suitable tool) and wood block, and then remove hub lock nut.·

CAUTION:

- **Do not place drive shaft joint at an extreme angle. Also be careful not to overextend slide joint.**
- **Do not allow drive shaft to hang down without support for housing (or joint sub-assembly), shaft and other parts.**

NOTE:

Use a puller (suitable tool) if wheel hub and drive shaft cannot be separated even after performing the above procedure.

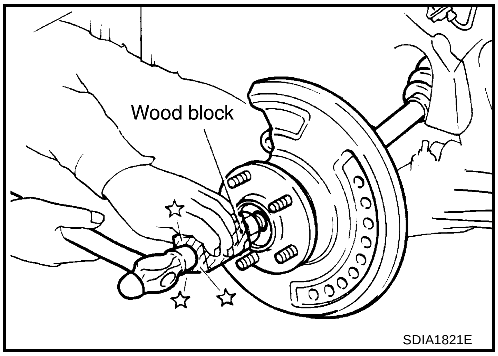

7. Remove fixing bolts and nuts, and then remove steering knuckle from strut assembly. Refer to FSU-8, "Components" .
8. Remove drive shaft from wheel hub.

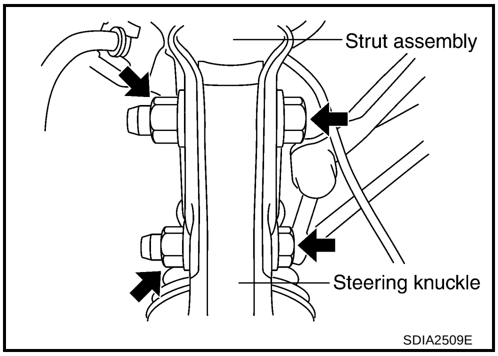

9. Remove cotter pin, and then loosen the nut. Refer to PS-17, "COMPONENT" .

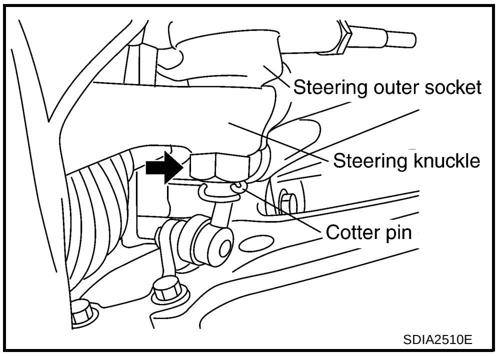

10. Remove steering outer socket from steering knuckle so as not to damage ball joint boot using the ball joint remover [SST].

CAUTION:

Temporarily tighten the nut to prevent damage to threads and to prevent ball joint remover [SST] from suddenly coming off.

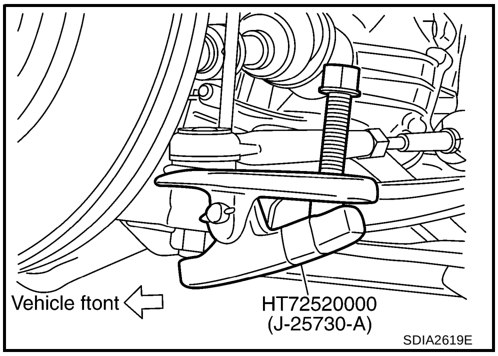

11. Remove cotter pin, and then loosen the nut.
12. Remove transverse link from steering knuckle so as not to damage ball joint boot using the ball joint remover [SST: HT72520000 (J-25730-A)], then remove steering knuckle from vehicle.

CAUTION:

Temporarily tighten nut to prevent damage to threads and to prevent ball joint remover [SST: HT72520000 (J-25730-A)] from suddenly coming off.

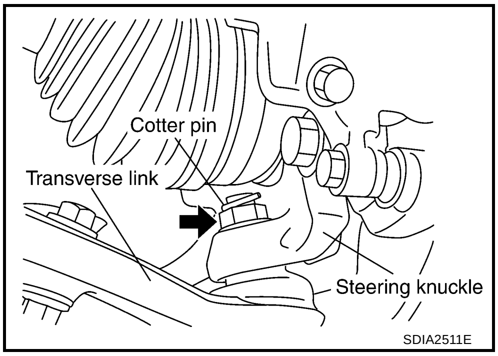

A B C FAX E F G H I J K L M

INSPECTION AFTER REMOVAL

Check components for deformation, cracks and other damage. Replace if there are.

Ball Joint Inspection

Check boots of transverse link and steering outer socket ball joint for breakage, axial play, and torque. Refer to FSU-15, "INSPECTION AFTER REMOVAL"FSU-15, "INSPECTION AFTER REMOVAL" , PS-22, "Outer Socket and Inner Socket" .

INSTALLATION

- Install in the reverse order of the removal. For tightening torque, Refer to FAX-7, "COMPONENT" .

  NOTE:
  Do not reuse non-reusable parts.
- Perform the final tightening of each of parts, under unladen conditions, which were removed when removing wheel hub and knuckle. Check the wheel alignment. Refer to FSU-18, "SERVICE DATA AND SPECIFICATIONS (SDS)" .
- Adjust neutral position of steering angle sensor after checking the wheel alignment for the models with VDC. Refer to BRC-43, "Adjustment of Steering Angle Sensor Neutral Position" .
- Check wheel sensor harness for proper connection. Refer to BRC-36, "WHEEL SENSORS" .
- Assembly disc rotor and wheel hub by aligning each matching mark as shown in the figure when installing disc rotor.

  NOTE:
  Refer to BR-25, "FRONT DISC BRAKE" for assembly when removing disc rotor without matching mark.

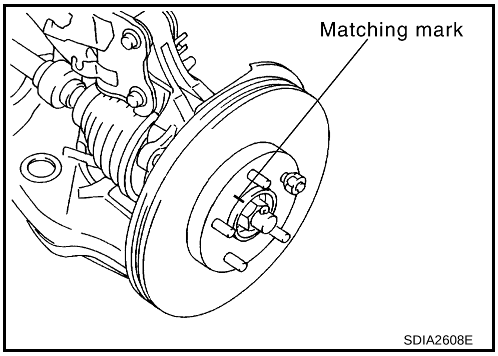

Disassembly and Assembly

ADS00153

DISASSEMBLY

CAUTION:

Do not disassemble if wheel bearing has no malfunction.

1. Secure steering knuckle on a vise at the part where strut is removed. Use the sliding hammer [SST] and attachment [SST], remove wheel hub from wheel bearing.

   CAUTION:

   When securing the knuckle on a vise, be careful not to damage strut mounting surface of steering knuckle. Use an aluminum plate or a suitable tool.

2. Remove snap ring (outer side) from steering knuckle using a flat-bladed screwdriver or similar tool.

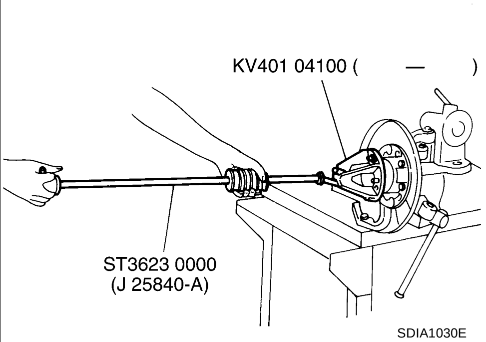

SDIA1030E

3. Press wheel hub from wheel bearing outer side inner race using a drift [SST] and a puller (suitable tool), then remove it.
4. Remove splash guard from steering knuckle using a flat-bladed screwdriver and hammer.
5. Remove snap ring (inner side) from steering knuckle using a flat-bladed screwdriver or similar tool.

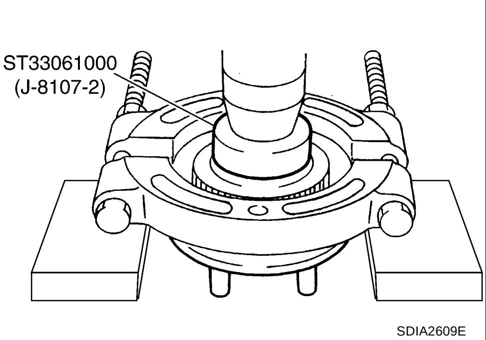

SDIA2609E

6. Press wheel bearing from steering knuckle using the drift [SST], then remove it.

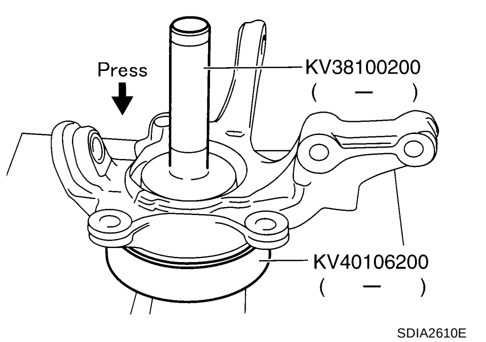

SDIA2610E

INSPECTION AFTER DISASSEMBLY

Wheel Hub

Check wheel hub for deformation, cracks, and other damage. If any irregular conditions are found, replace wheel hub.

Steering Knuckle

Check steering knuckle for deformation, cracks, and other damage. If any irregular conditions are found, replace steering knuckle.

Snap Ring

Check snap ring for wear or other damage. If any irregular conditions are found, replace snap ring.

ASSEMBLY

1. Press splash guard onto steering knuckle using the drift [SST].

NOTE:
- Do not reuse splash guard.

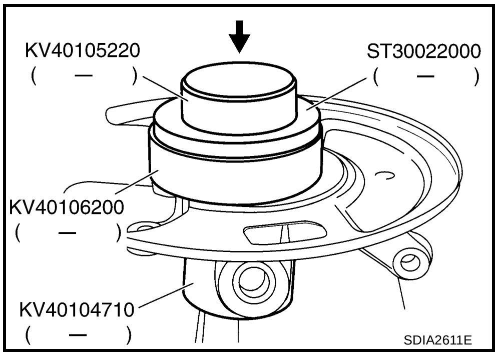

- Position splash guard shown in the figure.

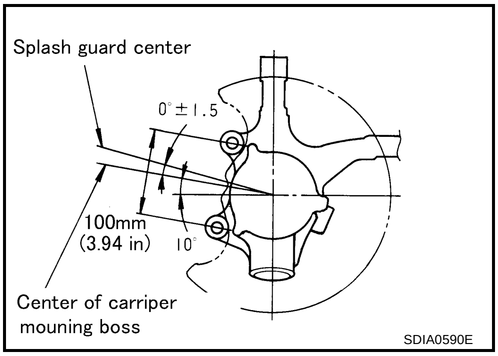

2. Install snap ring (inner side) securely to the ditch of steering knuckle inner side using a flat-bladed screwdriver or similar tool.
3. Use a drift [SST] to press wheel bearing securely from steering knuckle outer side as far as it will go.

NOTE:
- Do not reuse wheel bearing.
- The final press load guideline is 29,420 N (3,000kg, 6,615 lb).

4. Install snap ring (outer side) securely to the ditch of steering knuckle outer side using a flat-bladed screwdriver or similar tool.

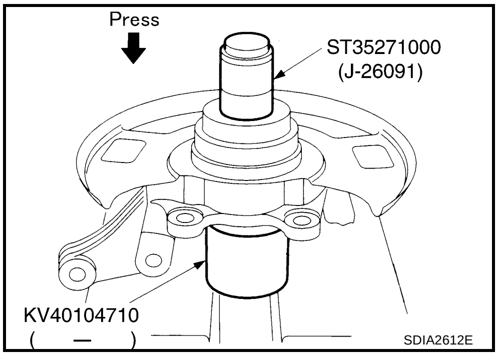

5. Press wheel hub onto wheel bearing using the drift [SST].

NOTE:
The final press load guideline is 49,033 N (5,000 kg, 11,000 lb).

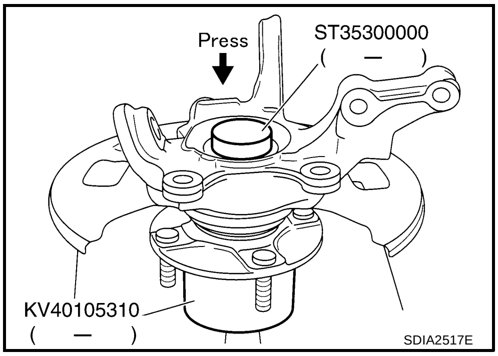

INSPECTION AFTER ASSEMBLY

1. With wheel hub pressed into wheel bearing, apply 34,324 to 49,033 N (3,500 to 5,000 kg, 7,718 to 11,000 lb) to wheel hub and rotate both clockwise and counterclockwise 10 times to minimize resistance.
2. Attach a spring balance in the position shown in the figure and pull at rate of 10±2 rpm to measure rotating torque.

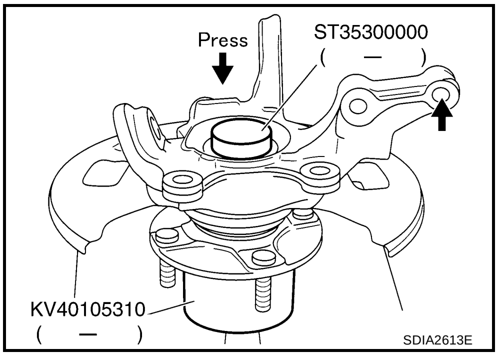

Rotating torque:

Less than 1.645 N·m (0.168 kg-m, 15 in-lb)

Spring balance reading:

Less than 10.6 N (1.1 kg, 2.4 lb)

FRONT DRIVE SHAFT

PFP:39100

On-Vehicle Inspection and Service

ADS00154

- Check drive shaft mounting point and joint for looseness and other damage.
- Check boot for cracks and other damage.

  CAUTION:

  Replace entire drive shaft assembly when noise or vibration occur from drive shaft.

DRIVE SHAFT BOOT REPLACEMENT

1. Remove tires from vehicle with a power tool.
2. Remove wheel sensor from steering knuckle. Refer to BRC-36, "WHEEL SENSORS" .

   CAUTION:

   Do not pull on wheel sensor harness.
3. Remove torque member fixing bolts with a power tool. Hang torque member in a place where it will not interfere with work. Refer to BR-25, "FRONT DISC BRAKE" .

   NOTE:

   Avoid depressing brake pedal while brake caliper is removed.
4. Remove disc rotor. Refer to BR-25, "FRONT DISC BRAKE" .
5. Remove cotter pin, then loosen hub lock nut with power tool.
6. Separate wheel hub from drive shaft by lightly tapping the end with a hammer (suitable tool) and wood block, and then remove hub lock nut.

   CAUTION:

   - **Do not place drive shaft joints at an extreme angle. Also be careful not to overextend slide joint.**
   - **Do not allow drive shaft to hang down without support for housing (or joint sub-assembly), shaft and the other parts.**

   NOTE:

   Use a puller (suitable tool) if wheel hub and drive shaft cannot be separated even after performing the above procedure.

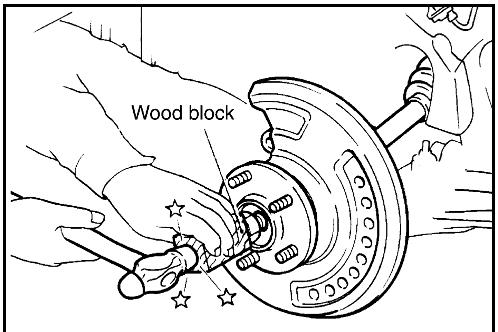

SDIA1821E

7. Remove fixing bolts and nuts, and then remove steering knuckle from strut assembly. Refer to FSU-8, "Components" .
8. Remove drive shaft from wheel hub.

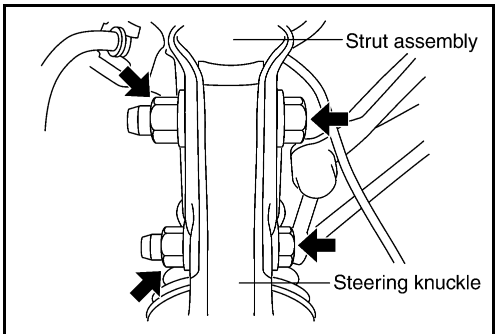

SDIA2509E

9. Remove boot bands, and then remove boot from joint sub-assembly.
10. Screw a drive shaft puller (suitable tool) into joint sub-assembly the screw part to a length of 30 mm (1.18 in) or more. Support drive shaft with one hand and pull out joint sub-assembly with a sliding hammer (suitable tool) from shaft.

    CAUTION:

    - **Align a sliding hammer and drive shaft and remove them by pulling firmly and uniformly.**
    - **If joint sub-assembly cannot be pulled out, try after removing drive shaft from vehicle.**
11. Remove boot from shaft.

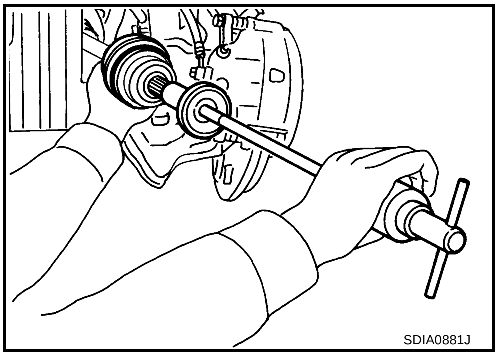

SDIA0881J

12. Remove the circular clip from shaft.
13. Clean the old grease on joint sub-assembly with paper towels.

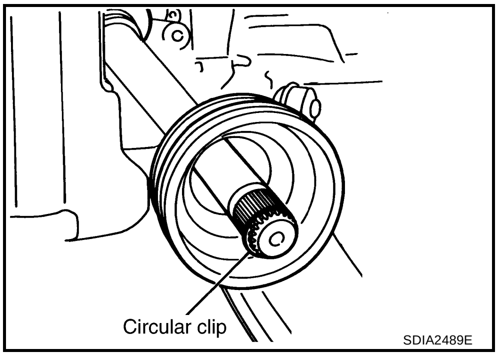

SDIA2489E

14. Insert the specified amount grease (NISSAN genuine grease or equivalent) into joint sub-assembly serration hole until grease begins to ooze from ball groove and serration hole. After inserting grease, use a shop cloth to wipe off old grease that has oozed out.

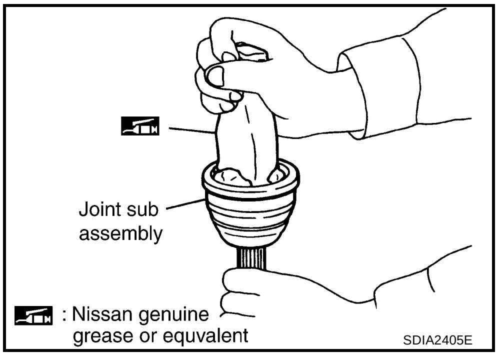

SDIA2405E

15. Wrap serration on shaft with tape to protect the boot from damage. Install new boot and boot bands to shaft.

    NOTE:

    Do not reuse boot bands and boot.
16. Remove the tape wrapped around the serration on shaft.

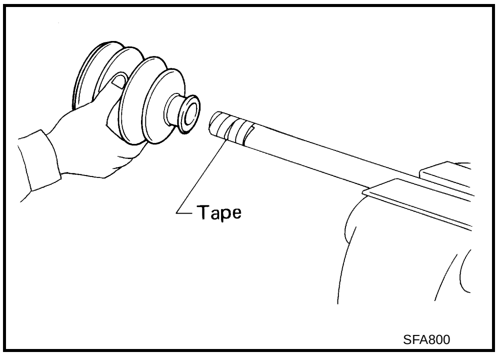

SFA800

17. Position circular clip on groove at the shaft edge. Align both center axles of the shaft edge and joint sub-assembly. Then assemble shaft with circular clip onto joint sub-assembly.

    NOTE:
    - Do not reuse the circular clip.
    - Drive joint inserter (suitable tool) is recommended when installing circular clip.

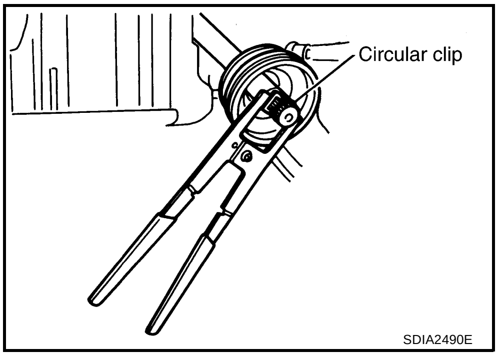

SDIA2490E

18. Install joint sub-assembly to shaft using plastic hammer.

    CAUTION:

    Confirm that joint sub-assembly is correctly engaged while rotating drive shaft.
19. Apply the specified amount of grease (NISSAN genuine grease or equivalent) to the boot from large end of boot.

    Grease amount : 115 - 125 g (4.06 - 4.41 oz)

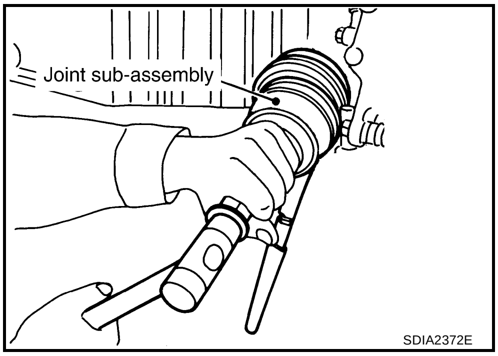

SDIA2372E

20. Install the boot securely into grooves (indicated by * marks) shown in the figure.

    CAUTION:

    If grease adheres to the boot mounting surface (with * mark) on shaft and joint sub-assembly, the boot may come off. Remove all grease from the surface.

21. To prevent from the deformation of the boot, adjust the boot installation length to the specified value shown below (L) by inserting a flat-bladed screwdriver into inside of the boot from the large diameter side of the boot and discharging the inside air.

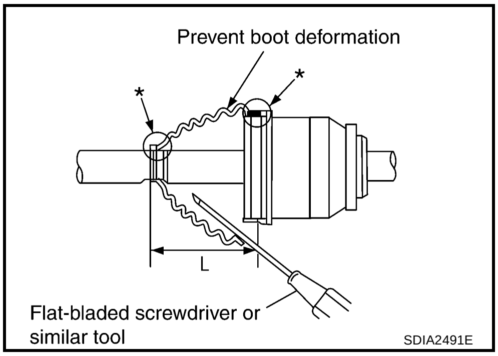

Boot installation length (L) : 100 - 106 mm (3.94 - 4.17 in)

CAUTION:

- **If the boot mounting length is outside the standard, it may cause breakage in the boot.**
- **Be careful not to touch the inside of the boot with a tip of a flat-bladed screwdriver.**

22. Secure the large and small ends of the boot with new boot bands use the boot band crimping tool [SST: KV40107300 (—)] as shown in the figure.

    NOTE:

    - Do not reuse boot bands.

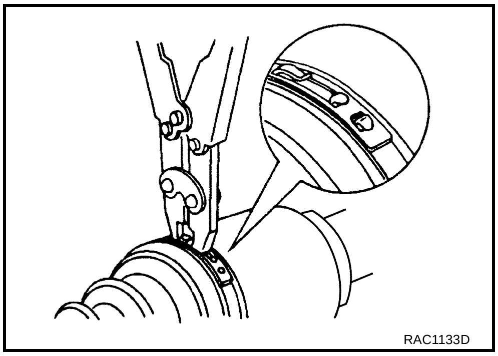

- Secure boot band so that dimension “M” meets specification as shown.

Dimension “M” : 2.0 - 3.0 mm (0.079 - 0.118 in)

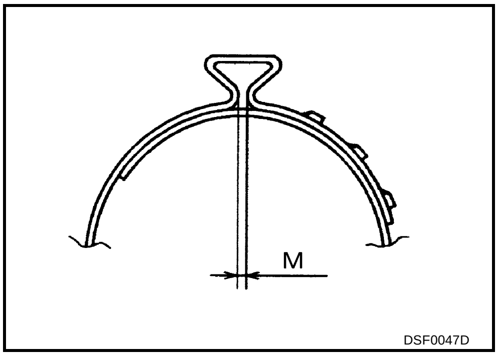

23. Secure joint sub-assembly and shaft, and then make sure that they are in the correct position when rotating boot. Install them with new boot band when boot installation positions become incorrect.
24. Confirm that circular clip on the transaxle side is not pulled out.
25. Insert drive shaft to wheel hub, and then temporarily tighten hub lock nut.
26. Install nuts and bolts of steering knuckle and strut. Refer to FSU-8, "Components" . “FRONT SUSPENSION ASSEMBLY” for tightening torque.
27. Install disc rotor. Refer to BR-25, "FRONT DISC BRAKE" .
28. Install torque member fixing bolts to steering knuckle. Refer to BR-25, "FRONT DISC BRAKE" .
29. Install wheel sensor to steering knuckle. Refer to BRC-36, "WHEEL SENSORS" .
30. Tighten hub lock nut to the specified torque. Refer to FAX-16, "COMPONENT" .
31. Install cotter pin.

    NOTE:

    Do not reuse cotter pin.
32. Install tires to vehicle.

Removal and Installation (RH)

ADS00155

COMPONENT

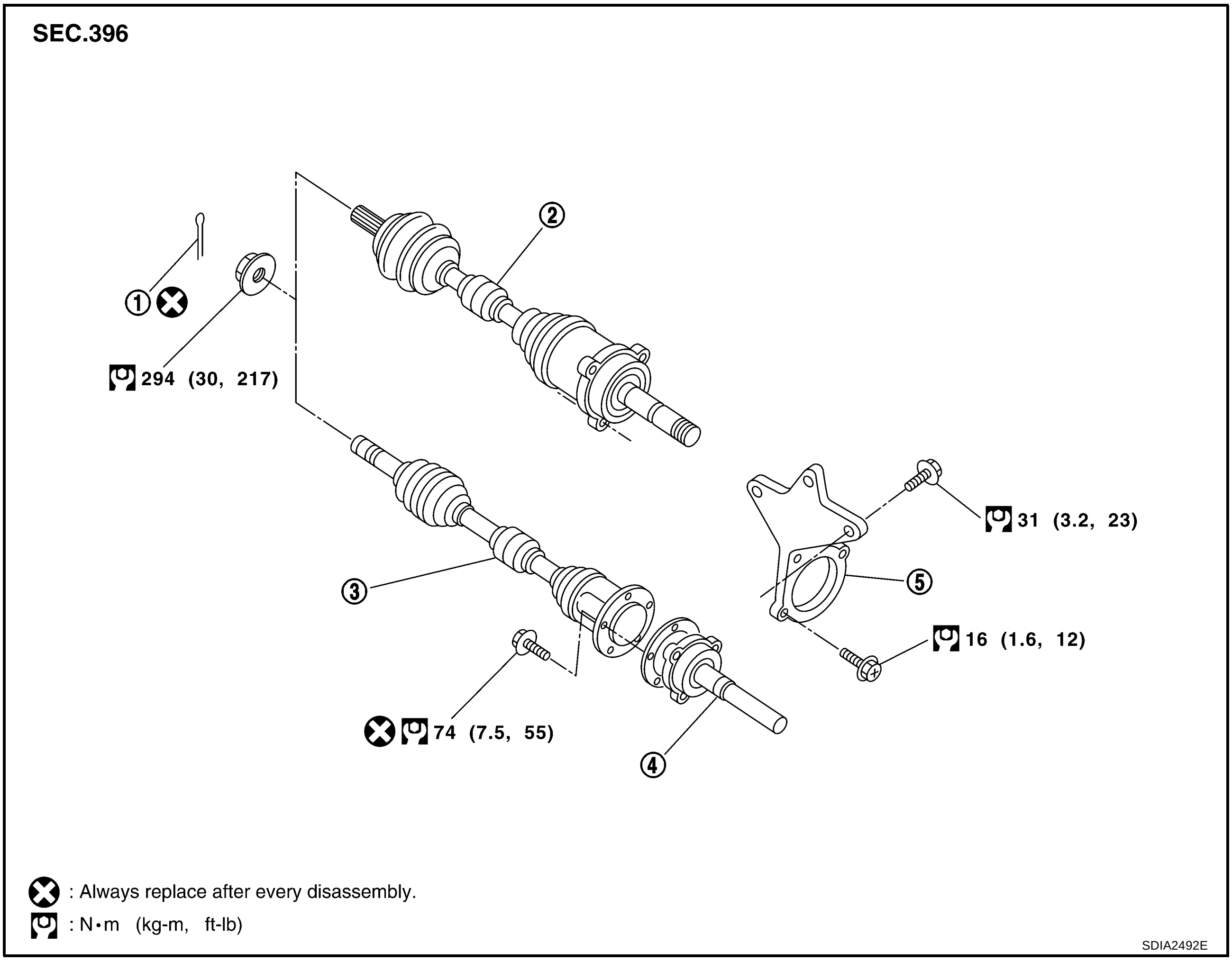

1. Cotter pin
2. Drive shaft (2WD models)
3. Drive shaft (AWD models)
4. Side shaft (AWD models)
5. Support bearing bracket

REMOVAL

1. Remove tires from vehicle with a power tool.
2. Remove wheel sensor from steering knuckle. Refer to BRC-36, "WHEEL SENSORS" .

   CAUTION:

   Do not pull on wheel sensor harness.
3. Remove torque member fixing bolts with a power tool. Hang torque member in a place where it will not interfere with work. Refer to BR-25, "FRONT DISC BRAKE" .

   NOTE:

   Avoid depressing brake pedal while brake caliper is removed.
4. Remove disc rotor. Refer to BR-25, "FRONT DISC BRAKE" .
5. Remove cotter pin, then loosen hub lock nut with a power tool.

6. Separate wheel hub from drive shaft by lightly tapping the end with a hammer (suitable tool) and a wood block, and then remove hub lock nut.

   CAUTION:
   - **Do not place drive shaft joints at an extreme angle. Also be careful not to overextend slide joint.**
   - **Do not allow drive shaft to hang down without support for housing (or joint sub-assembly), shaft and the other parts.**

   NOTE:
   Use a puller (suitable tool) if wheel hub and drive shaft cannot be separated even after performing the above procedure.

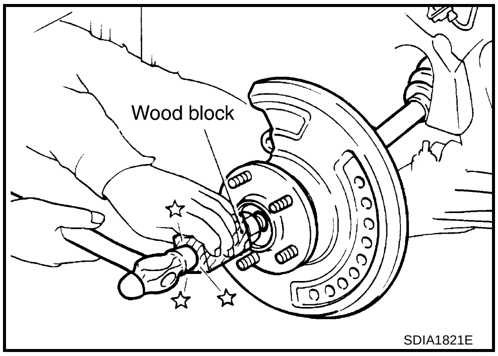

7. Remove fixing bolts and nuts, and then remove steering knuckle from strut assembly. Refer to FSU-8, "Components" .
8. Remove drive shaft from wheel hub.

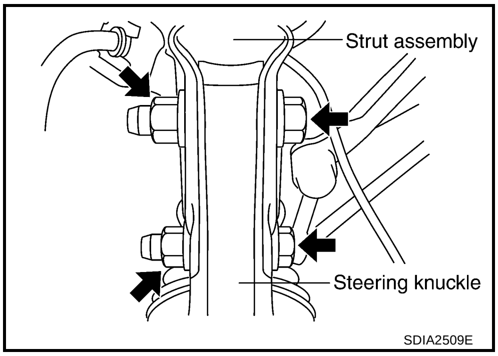

9. Remove fixing bolts, and then separate drive shaft and support bearing bracket (2WD models). Remove fixing bolts, and then separate drive shaft and side shaft. (AWD models).
10. Remove drive shaft from transaxle using a flat-bladed screwdriver as shown in the figure. (2WD models)

    CAUTION:
    - **Do not place drive shaft joints at an extreme angle when removing drive shaft. Also be careful not to overextend slide joint.**
    - **Do not allow drive shaft to hang down without support for housing (or joint sub-assembly), shaft and the other parts.**

11. Remove fixing bolts of support bearing bracket, then remove side shaft from transaxle. (AWD models)

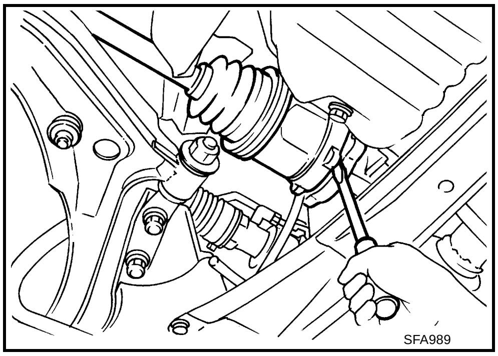

INSPECTION AFTER REMOVAL

- Move joint up/down, left/right, and in the axial direction. Check for motion that is not smooth and for significant looseness.
- Check boot for cracks, damage, and leakage of grease.
- Disassemble drive shaft and exchange malfunctioning part if there is a non-standard condition.

INSTALLATION

CAUTION:
Always replace transaxle side oil seal with new one when installing drive shaft or side shaft.

- Install in the reverse order of the removal. For tightening torque, refer to FAX-16, "COMPONENT" .

  NOTE:
  Do not reuse non-reusable parts.

- Press the protector [SST] onto transaxle to prevent damage to the oil seal while inserting drive shaft or side shaft. Slide drive shaft sliding joint and tap with a hammer to install securely.

  CAUTION:

  Make sure that circular clip is completely engaged.

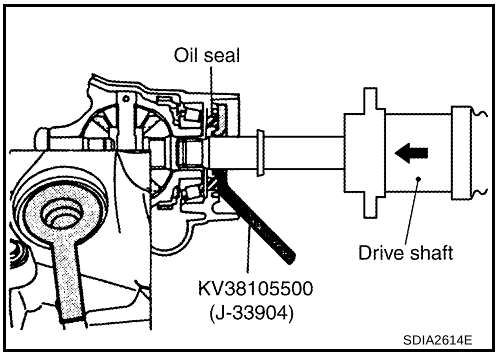

Removal and Installation (LH)

ADS00156

COMPONENT

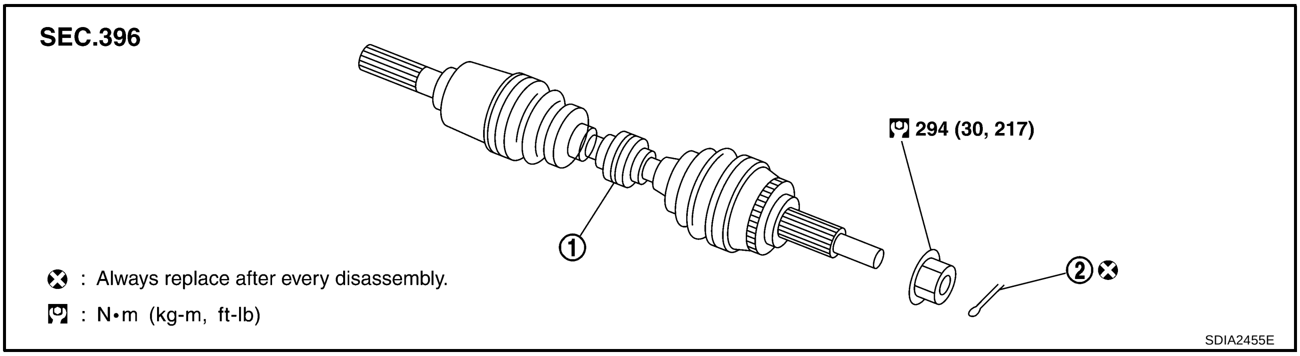

1. Drive shaft
2. Cotter pin

REMOVAL

1. Remove tires from vehicle with a power tool.
2. Remove wheel sensor from steering knuckle. Refer to BRC-36, "WHEEL SENSORS" .

   CAUTION:

   Do not pull on wheel sensor harness.
3. Remove torque member fixing bolts with a power tool. Hang torque member in a place where it will not interfere with work. Refer to BR-25, "FRONT DISC BRAKE" .

   NOTE:

   Avoid depressing brake pedal while brake caliper is removed.
4. Remove disc rotor.BR-25, "FRONT DISC BRAKE" .
5. Remove cotter pin, then loosen hub lock nut with a power tool.
6. Separate wheel hub from drive shaft by lightly tapping the end with a hammer (suitable tool) and wood block, and then remove hub lock nut.

   CAUTION:

   - **Do not place drive shaft joint at an extreme angle. Also be careful not to overextend slide joint.**
   - **Do not allow drive shaft to hang down without support for housing (or joint sub-assembly), shaft and the other parts.**

   NOTE:

   Use a puller (suitable tool) if wheel hub and drive shaft cannot be separated even after performing the above procedure.

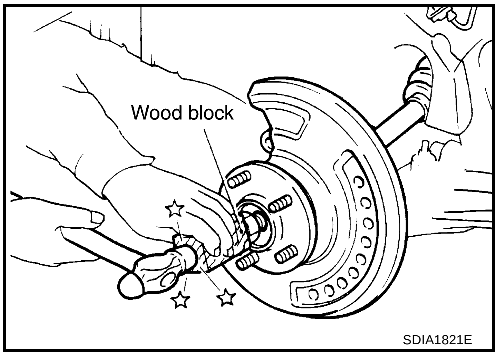

7. Remove fixing bolts and nuts, and then remove steering knuckle from strut assembly. Refer to FSU-8, "Components" .
8. Remove drive shaft from wheel hub.

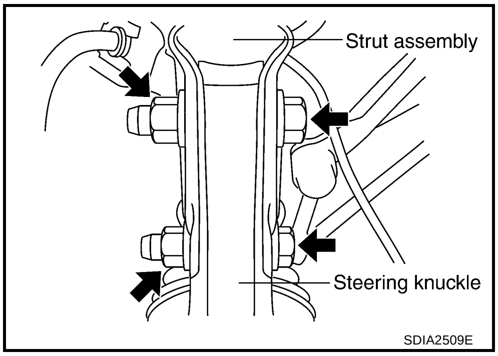

9. Remove drive shaft from transaxle.
   - Remove drive shaft from transaxle using the drive shaft attachment [SST] and a drive shaft puller (suitable tool) while inserting tip of the drive shaft attachment [SST] between housing and transaxle as shown in the figure.
   - Make sure that circular clip is attached on the edge.

   CAUTION:
   Do not place drive shaft joint at an extreme angle when removing drive shaft. Also be careful not to overextend slide joint.

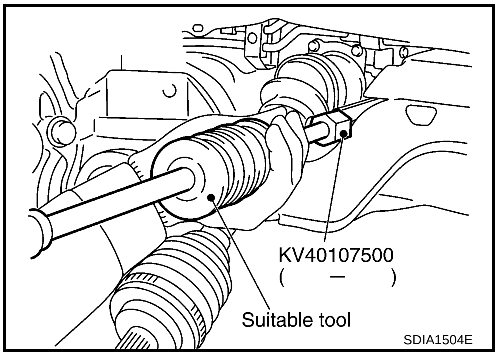

INSPECTION AFTER REMOVAL

- Move joint up/down, left/right, and in the axial direction. Check for motion that is not smooth and for significant looseness.
- Check boot for cracks, damage, and leakage of grease.
- Disassemble drive shaft and exchange malfunctioning part if there is a non-standard condition.

INSTALLATION

CAUTION:
Always replace transaxle side oil seal with new one when installing drive shaft.

- Install in the reverse order of the removal. For tightening torque, refer to FAX-18, "COMPONENT" .

  NOTE:
  Do not reuse non-reusable parts.
- Place the protector [SST] onto transaxle to prevent damage to the oil seal while inserting drive shaft. Slide drive shaft sliding joint and tap with a hammer to install securely.

  CAUTION:
  Make sure that circular clip is completely engaged.

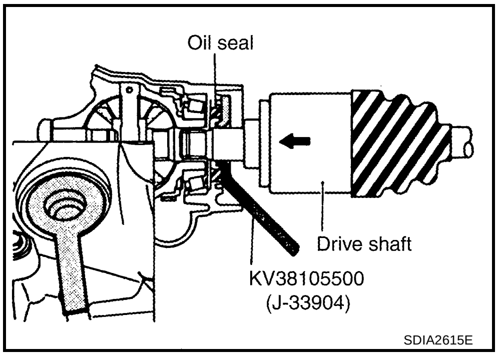

Disassembly and Assembly (Models with 2WD: RH)

ADS00157

COMPONENT

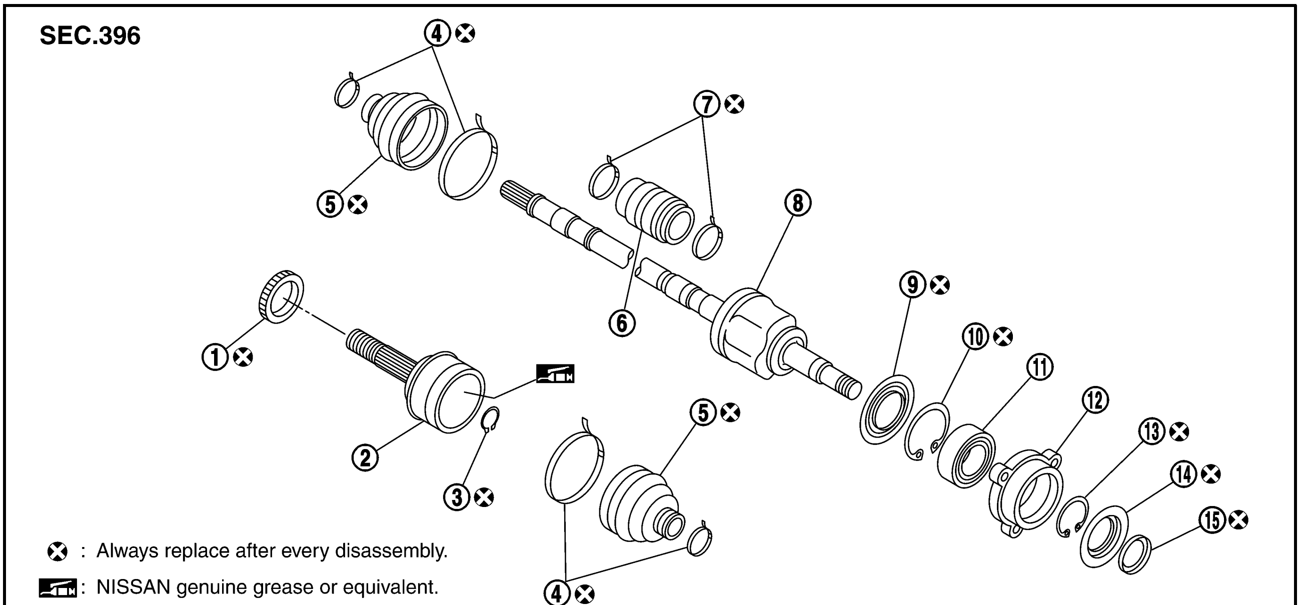

SDIA2472E

1.	Sensor rotor	2.	Joint sub-assembly	3.	Circular clip
4.	Boot band	5.	Boot	6.	Dynamic damper
7.	Band	8.	Housing assembly	9.	Dust cover A
10.	Snap ring	11.	Support bearing	12.	Retainer
13.	Snap ring	14.	Dust cover B	15.	Dust cover C

DISASSEMBLY

Transaxle Side

1. Housing on the side of transaxle cannot be disassembled. When removing boot, perform procedure 1 to 6 on the wheel side first. And then remove dynamic damper and band.
2. Remove boot bands, then remove boots from housing assembly, and remove boot from shaft after the above service.
3. Clean old grease on housing assembly with paper towels.

Wheel Side

1. As shown in the figure, remove sensor rotor from drive shaft using a bearing replacer (suitable tool) and puller (suitable tool).
2. Secure shaft in a vise.

   CAUTION:
   Protect shaft when securing in a vise using aluminum or copper plates.
3. Remove boot bands, and then remove boot from joint sub-assembly.

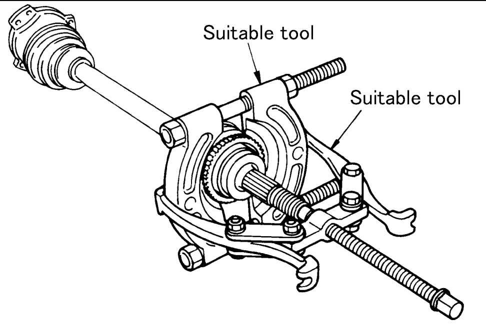

SDIA0595E

4. Screw a drive shaft puller (suitable tool) 30 mm (1.18 in) or more onto the thread on joint sub-assembly, and pull joint sub-assembly out of shaft.

   CAUTION:
   - **Replace entire drive shaft assembly if joint sub-assembly cannot be removed after five or more unsuccessful attempts.**
   - **Align sliding hammer and drive shaft and remove them by pulling firmly and uniformly.**

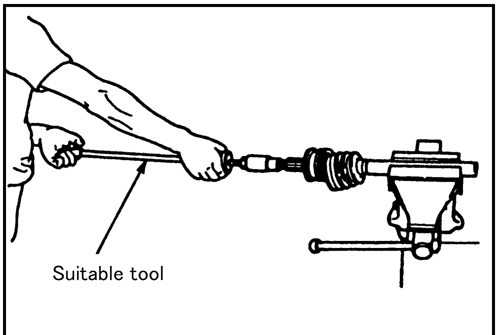

SDIA0606E

5. Remove boot from shaft.
6. Remove circular clip from shaft.
7. Clean old grease on joint sub-assembly with paper towels while rotating ball cage.

Support Bearing

1. Remove dust cover B and C from housing assembly use a brass rod and flat-bladed screwdriver.

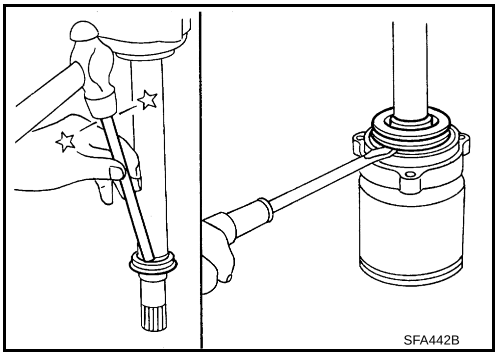
SFA442B

2. Remove snap ring from housing assembly using a snap ring plier (suitable tool).

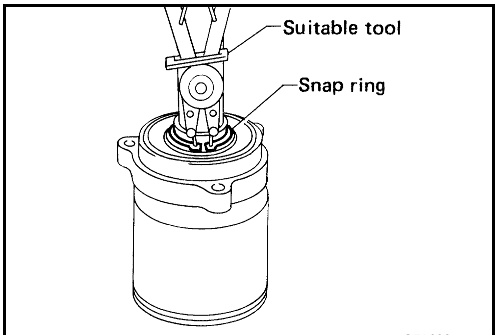

SFA692

3. Press out retainer and support bearing from housing assembly.

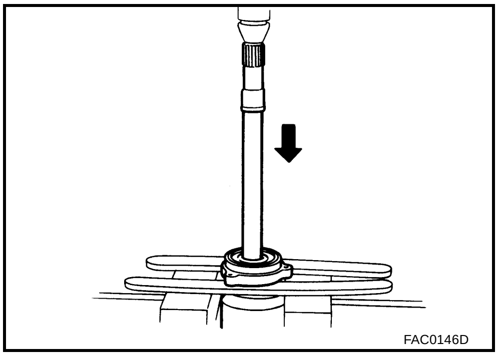
FAC0146D

4. Remove snap ring, and then remove support bearing from retainer using the drift [SST].
5. Remove dust cover A from housing assembly.

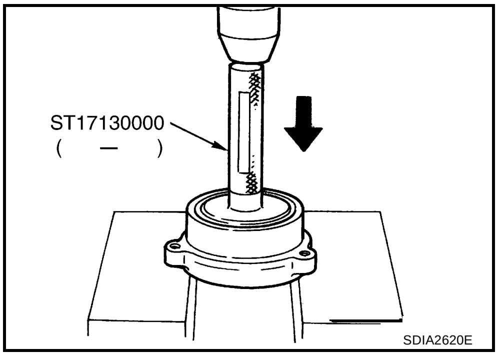

INSPECTION AFTER DISASSEMBLY

Shaft

Check shaft for runout, cracks, or other damage. Replace shaft and housing assembly in a set.

Joint Sub-Assembly (Wheel Side)

Check the following:

- Joint sub-assembly for rough rotation and excessive axial looseness.
- Inside the joint sub-assembly for entry of foreign material.
- Joint sub-assembly for compression scars, cracks, and fractures inside of joint sub-assembly.

Replace joint sub-assembly if there is any of non-standard conditions.

Housing Assembly (Transaxle Side)

NOTE:
Housing assembly cannot be disassembled. If there is any of non-standard conditions, replace housing assembly.

Support Bearing and Retainer

- Check support bearing for wear and other damage.
- Check retainer for cracks and other damage.

Dynamic Damper

Check for cracks, and other damage. Replace if there are.

ASSEMBLY

Transaxle Side

1. Wrap serration on shaft with tape to protect boot from damage. Install new boot and boot bands to shaft.

   NOTE:
   Do not reuse boot bands and boot.
2. Remove the tape wrapped around the serration on shaft.
3. Apply the specified amount of grease (NISSAN genuine grease or equivalent) to housing assembly.

   Grease amount : 132 - 142 g (4.66 - 5.01 oz)

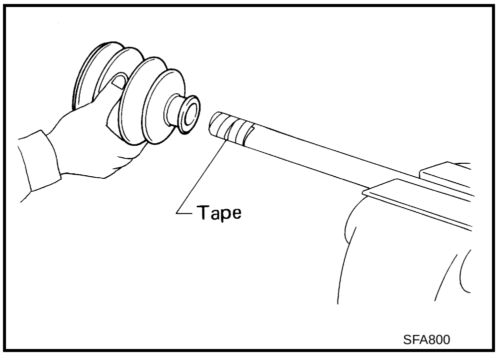

4. Install boot securely into grooves (indicated by * marks) shown in the figure.

   CAUTION:

   If grease adheres to the boot mounting surface (with * mark) on housing assembly, boot may come off. Remove all grease from surface.

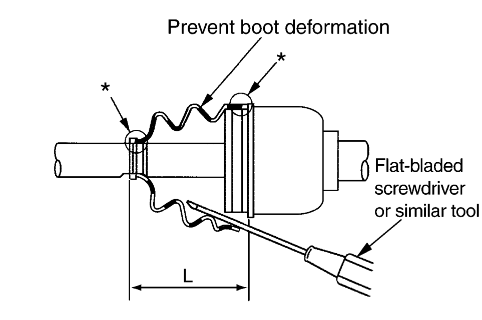

SDIA2493E

5. To prevent from deformation of the boot, adjust the boot installation length to the value shown below (L) by inserting a flat-bladed screwdriver or similar tool into the inside of boot from large diameter side of boot and discharging inside air.

   Boot installation length (L): 84 - 86 mm (3.31 - 3.39 in)

   CAUTION:
   - **If the boot installation length is outside the standard, it may cause breakage in boot.**
   - **Be careful not to touch inside of the boot with the tip of a flat-bladed screwdriver.**

6. Secure the large and small ends of the boot with new boot bands as shown in the figure.

   NOTE:

   Do not reuse boot bands.

7. Secure housing and shaft, and then make sure that they are in the correct position when rotating boot. Install them with new boot band when boot installation positions become incorrect.

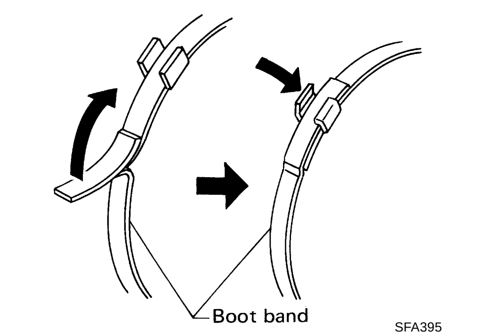

SFA395

8. Secure dynamic damper with bands in the following specified position when removing.

   NOTE:

   Do not reuse bands.

   Dimension A : 207 - 213 mm (8.15 - 8.39 in)

   Dimension B : 70 mm (2.76 in)

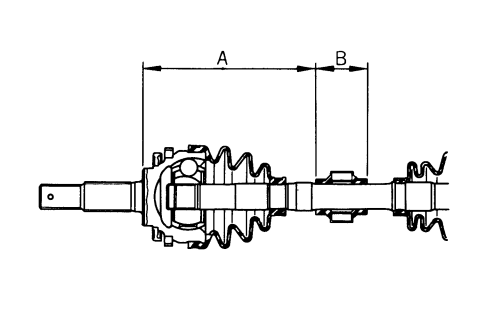

FAC0156D

Wheel Side

1. Use the drift [SST] to press-fit sensor rotor into joint sub-assembly.

   NOTE:

   Do not reuse sensor rotor.

2. Perform the step 14 to 24 of “On-Vehicle Inspection and Service”, after the above service. Refer to FAX-13, "DRIVE SHAFT BOOT REPLACEMENT" .

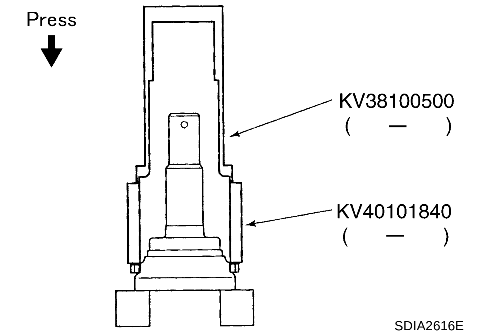

SDIA2616E

Support Bearing

1. Install support bearing into retainer use the drift [SST].

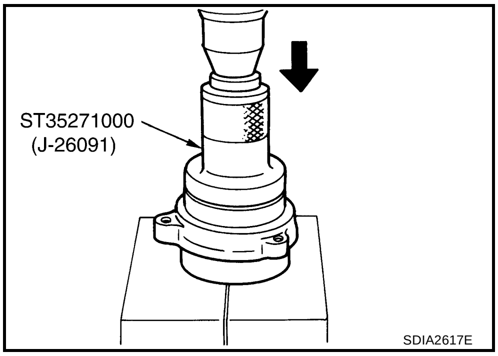

SDIA2617E

2. Install snap ring to retainer.

   NOTE:
   Do not reuse snap ring.

3. Install dust cover A to housing assembly.

   NOTE:
   Do not reuse dust cover A

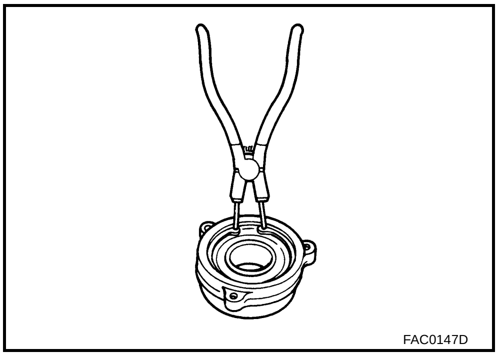
FAC0147D

4. Install support bearing and retainer to housing assembly use the drift [SST].

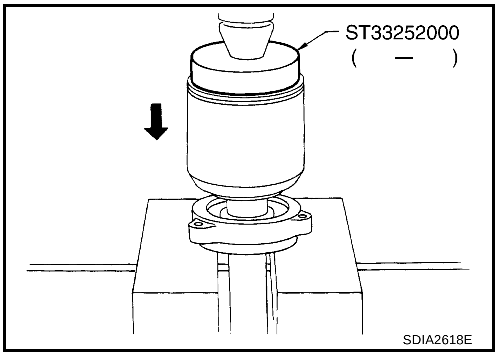

SDIA2618E

5. Install snap ring to housing assembly use a snap ring plier (suitable tool).

   NOTE:
   Do not reuse snap ring.

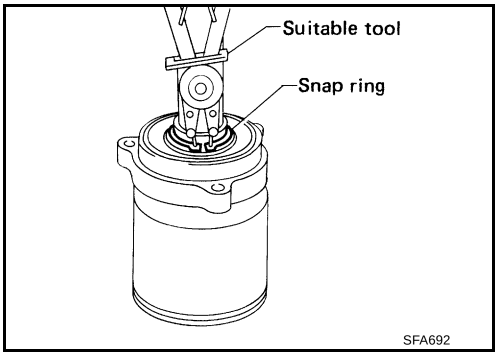

SFA692

6. Install dust cover B and C to housing assembly using a brass rod and flat-bladed screwdriver.

   NOTE:
   Do not reuse dust cover.

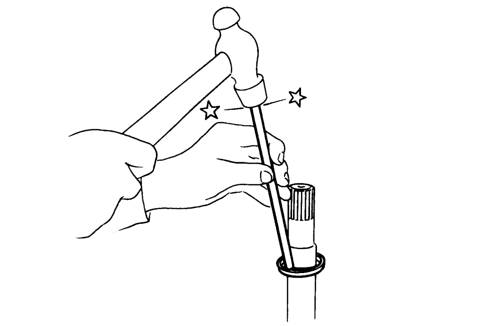

FAC0154D

Disassembly and Assembly (Models with AWD: RH)

ADS00158

COMPONENT

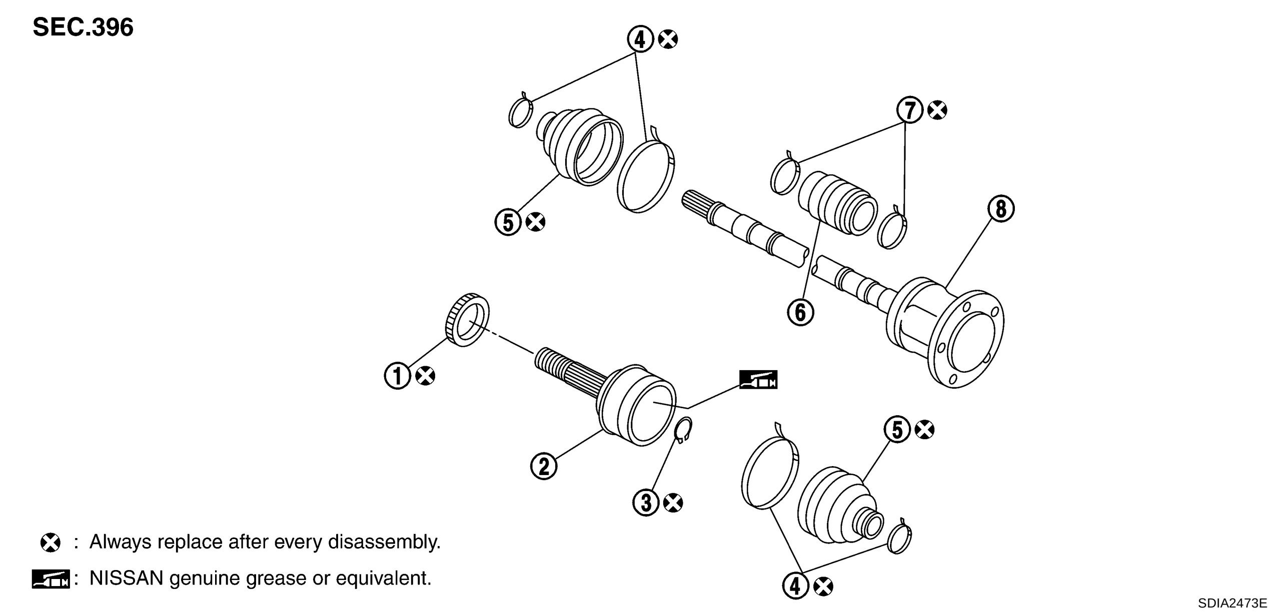

SDIA2473E

1.	Sensor rotor	2.	Joint sub-assembly	3.	Circular clip
4.	Boot band	5.	Boot	6.	Dynamic damper
7.	Band	8.	Housing assembly		

DISASSEMBLY

Transaxle Side

1. Housing on the side of transaxle cannot be disassembled. When removing boot, perform procedure 1 to 6 on the wheel side first. And then remove dynamic damper and band.
2. Remove boot bands, then remove boots from housing assembly, and remove boot from shaft after the above service.
3. Clean old grease on housing assembly with paper towels.

Wheel Side

1. As shown in the figure, use a bearing replacer (suitable tool) and puller (suitable tool) to remove sensor rotor from drive shaft.
2. Secure the shaft in a vise.

   CAUTION:
   Protect shaft when securing in a vise using aluminum or copper plates.
3. Remove boot bands, and then remove boot from joint sub-assembly.

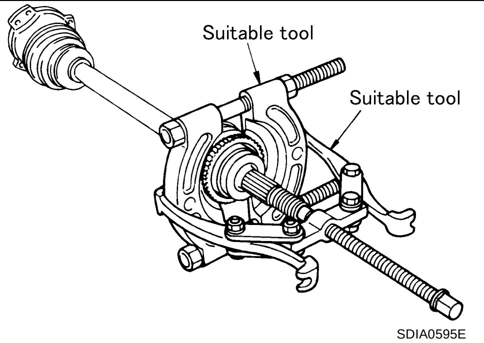

SDIA0595E

4. Screw the drive shaft puller (suitable tool) 30 mm (1.18 in) or more onto the thread on joint sub-assembly, and pull joint sub-assembly out of the shaft.

   CAUTION:
   - **Replace entire drive shaft assembly if joint sub-assembly cannot be removed after five or more unsuccessful attempts.**
   - **Align sliding hammer and drive shaft and remove them by pulling firmly and uniformly.**

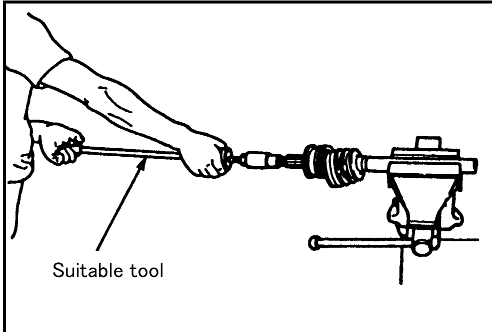

SDIA0606E

5. Remove boot from shaft.
6. Remove circular clip from shaft.
7. Clean old grease on joint sub-assembly with paper towels while rotating ball cage.

INSPECTION AFTER DISASSEMBLY

Shaft

Check shaft for runout, cracks, or other damage. Replace shaft and housing assembly in a set.

Joint Sub-Assembly (Wheel Side)

Check the following:

- Joint sub-assembly for rough rotation and excessive axial looseness.
- Inside the joint sub-assembly for entry of foreign material.
- Joint sub-assembly for compression scars, cracks, and fractures inside of joint sub-assembly.

Replace joint sub-assembly if there is any of non-standard conditions.

Housing Assembly (Transaxle Side)

NOTE:
Housing assembly cannot be disassembled. If there is any of non-standard conditions, replace housing assembly.

Dynamic Damper

Check for cracks, and other damage. Replace if there are.

ASSEMBLY

Transaxle Side

1. Wrap serration on shaft with tape to protect boot from damage. Install new boot and boot bands to shaft.

   NOTE:
   Do not reuse boot bands and boot.

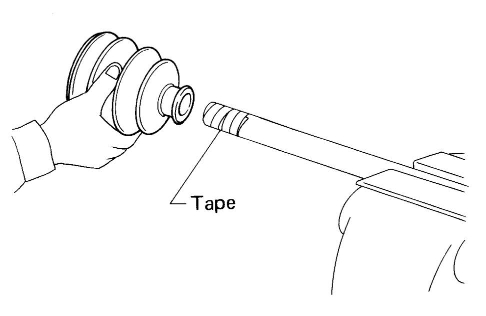

SFA800

2. Remove the tape wrapped around the serration on shaft.
3. Apply the specified amount of grease (NISSAN genuine grease or equivalent) to the housing assembly.

   Grease amount : 132 - 142 g (4.66 - 5.01 oz)

4. Install boot securely into grooves (indicated by * marks) shown in the figure.

   CAUTION:
   If grease adheres to the boot mounting surface (with * mark) on housing assembly, boot may come off. Remove all grease from surface.

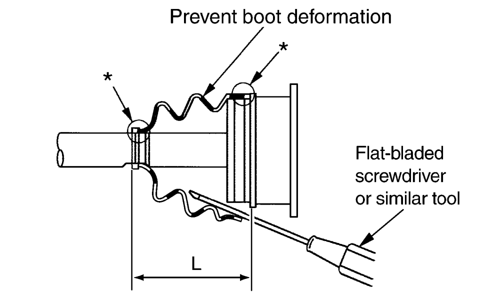

SDIA2488E

5. To prevent from deformation of boot, adjust the boot installation length to the value shown below (L) by inserting flat-bladed screwdriver or similar tool into the inside of boot from the large diameter side of boot and discharging inside air.

   Boot installation length (L): 84 - 86 mm (3.31 - 3.39 in)

CAUTION:
- **If the boot mounting length is outside the standard, it may cause breakage in boot.**
- **Be careful not to touch the inside of boot with a tip of a flat-bladed screwdriver.**

6. Secure the large and small ends of boot with new boot bands as shown in the figure.
   NOTE:
   Do not reuse boot bands.
7. Secure housing and shaft, and then make sure that they are in the correct position when rotating boot. Install them with new boot band when boot installation positions become incorrect.

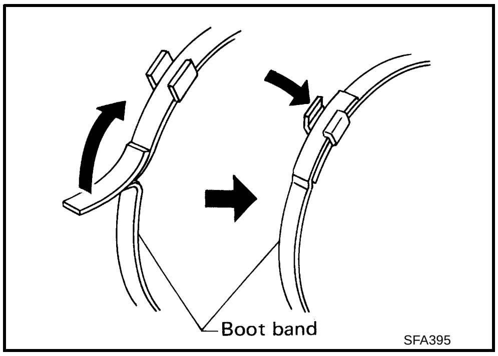

8. Secure dynamic damper with bands in the following specified position when removing.
   NOTE:
   Do not reuse bands.

Dimension A : 207 - 213 mm (8.15 - 8.39 in)
Dimension B : 70 mm (2.76 in)

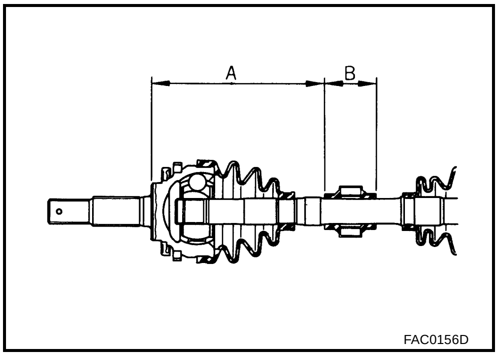

Wheel Side

1. Use the drift [SST] to press-fit sensor rotor into joint sub-assembly.
   NOTE:
   Do not reuse sensor rotor.
2. Perform the step 14 to 24 of “On-Vehicle Inspection and Service”, after the above service. Refer to FAX-13, "DRIVE SHAFT BOOT REPLACEMENT" .

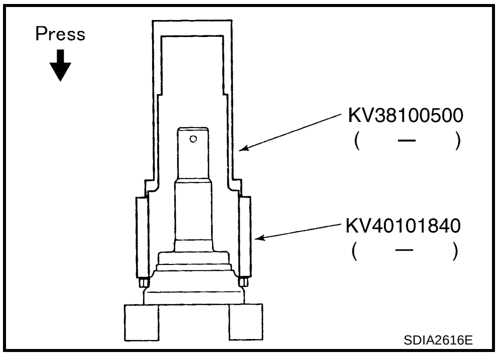

Disassembly and Assembly (LH)

ADS00159

COMPONENT

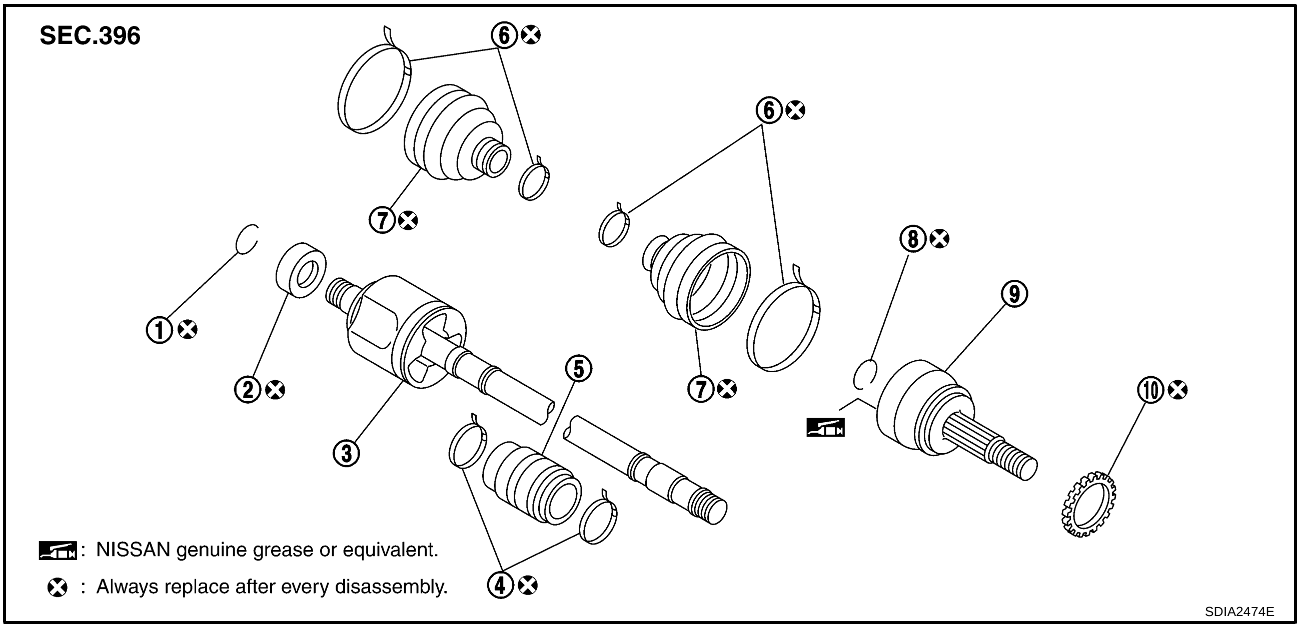

1.	Circular clip	2.	Dust cover	3.	Housing assembly
4.	Band	5.	Dynamic damper	6.	Boot band
7.	Boot	8.	Circular clip	9.	Joint sub-assembly
10.	Sensor rotor				

DISASSEMBLY

Transaxle Side

1. Housing on the side of transaxle cannot be disassembled. When removing boot, perform procedure 1 to 6 on the wheel side first. And then remove dynamic damper and band.
2. Remove boot bands, then remove boots from housing assembly, and remove boot from shaft after the above service.
3. Remove circular clip and dust cover from housing assembly.
4. Clean old grease on housing assembly with paper towels.

Wheel Side

1. As shown in the figure, use a bearing replacer (suitable tool) and puller (suitable tool) to remove sensor rotor from drive shaft.
2. Secure shaft in a vise.

   CAUTION:
   Protect shaft when securing in a vise using aluminum or copper plates.
3. Remove boot bands, and then remove boot from joint sub-assembly.

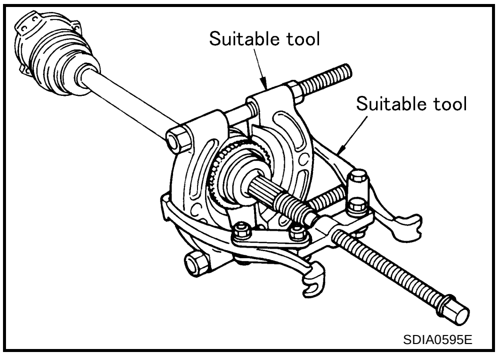

4. Screw a drive shaft puller (suitable tool) 30 mm (1.18 in) or more onto the thread on joint sub-assembly, and pull joint sub-assembly out of the shaft.

   CAUTION:
   - **Replace entire drive shaft assembly if joint sub-assembly cannot be removed after five or more unsuccessful attempts.**
   - **Align sliding hammer and drive shaft and remove them by pulling firmly and uniformly.**

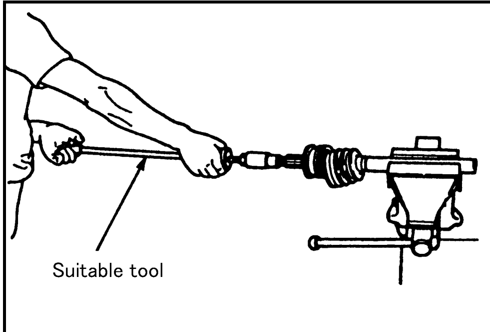

SDIA0606E

5. Remove boot from shaft.
6. Remove circular clip from shaft.
7. Clean old grease on joint sub-assembly with paper towels while rotating ball cage.

INSPECTION AFTER DISASSEMBLY

Shaft

Check shaft for runout, cracks, or other damage. Replace shaft and housing assembly in a set.

Joint Sub-Assembly (Wheel Side)

Check the following:

- Joint sub-assembly for rough rotation and excessive axial looseness.
- Inside the joint sub-assembly for entry of foreign material.
- Joint sub-assembly for compression scars, cracks, and fractures inside of joint sub-assembly.

Replace joint sub-assembly if there is any of non-standard conditions.

Housing Assembly (Transaxle Side)

NOTE:
Housing assembly cannot be disassembled. If there is any of non-standard conditions, replace housing assembly.

Dynamic Damper

Check for cracks, and other damage. Replace if there are.

ASSEMBLY

Transaxle Side

1. Wrap serration on shaft with tape to protect boot from damage. Install new boot and boot bands to shaft.

   NOTE:
   Do not reuse boot bands and boot.

2. Remove the tape wrapped around the serration on shaft.
3. Apply the specified amount of grease (NISSAN genuine grease or equivalent) to housing assembly.

   Grease amount : 132 - 142 g (4.66 - 5.01 oz)

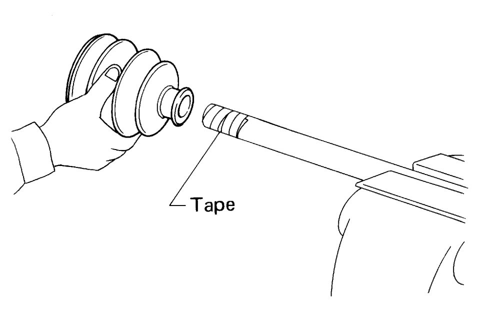

SFA800

4. Install boot securely into grooves (indicated by* marks) shown in the figure.

   CAUTION:
   If grease adheres to the boot mounting surface (with * mark) on housing assembly, boot may come off. Remove all grease from the surface.

5. To prevent from the deformation of the boot, adjust the boot installation length to value shown below (L) by inserting the flat-bladed screwdriver or similar tool into inside of boot from the large diameter side of the boot and discharging the inside air.

   Boot installation length (L): 84 - 86 mm (3.37 - 3.39 in)

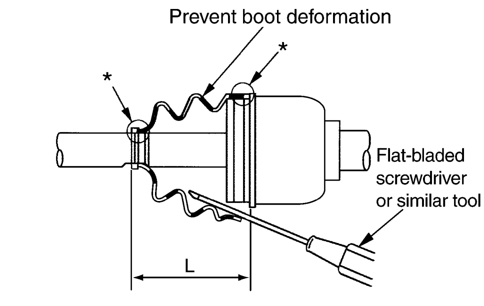

SDIA2493E

CAUTION:

- **If the boot installation length is outside the standard, it may cause breakage in the boot.**
- **Be careful not to touch the inside of boot with tip of a flat-bladed screwdriver.**

6. Secure the large and small ends of boot with new boot bands as shown in the figure.

   NOTE:
   Do not reuse boot bands.

7. Secure housing and shaft, and then make sure that they are in the correct position when rotating boot. Install them with new boot band when boot installation positions become incorrect.

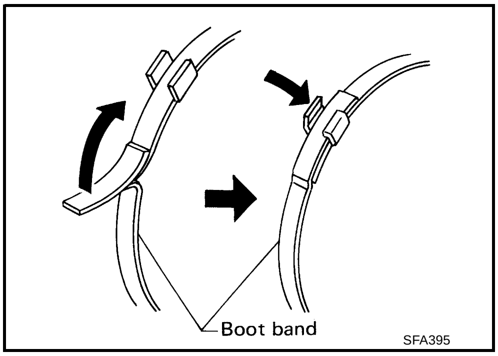

8. Secure dynamic damper with bands in the following specified position when removing.

   NOTE:
   Do not reuse bands.

   Dimension A : 207 - 213 mm (8.15 - 8.39 in)
   Dimension B : 70 mm (2.76 in)

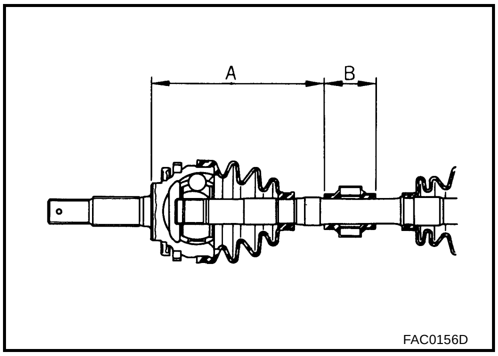

9. Install circular clip and dust cover to housing.

   NOTE:
   Do not reuse circular clip and dust cover.

Wheel Side

1. Use the drift [SST] to press-fit sensor rotor into joint sub-assembly.

   NOTE:
   Do not reuse sensor rotor.

2. Perform the step 14 to 24 of “On-Vehicle Inspection and Service”, after the above service. Refer to FAX-13, "DRIVE SHAFT BOOT REPLACEMENT" .

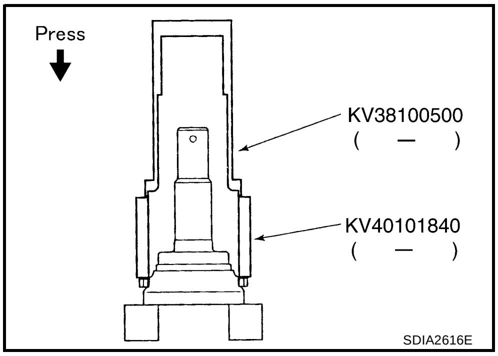

SERVICE DATA AND SPECIFICATIONS (SDS)

PFP:00030

Wheel Bearing

ADS0015A

Axial end play	0.05 mm (0.002 in) or less
Rotating torque	Less than 1.645 N·m (0.168 kg-m, 15 in-lb)
Spring balance reading	Less than 10.6 N (1.1 kg, 2.4 lb)
Measuring point	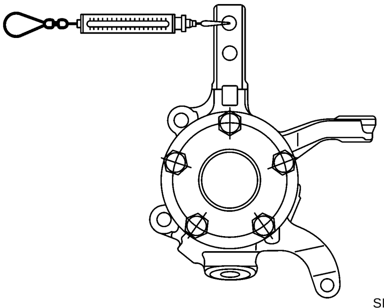 SDIA2518E

Drive Shaft

ADS0015B

Joint type	Wheel side	Transaxle side
Grease quantity	115 - 125 g (4.06 - 4.41 oz)	132 - 142 g (4.66 - 5.01 oz)
Boot installation length	100 - 106 mm (3.94 - 4.17 in)	84 - 86 mm (3.31 - 3.39 in)

Dynamic Damper

ADS0015C

Dimension A	Dimension B
207 – 213 mm (8.15 – 8.39 in)	70 mm (2.76 in)

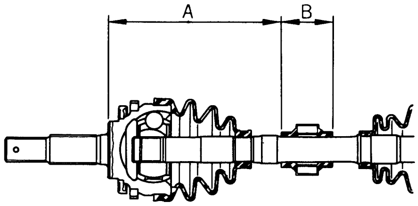

FAC0156D

A
B
C
FAX
E
F
G
H
I
J
K
L
M